8

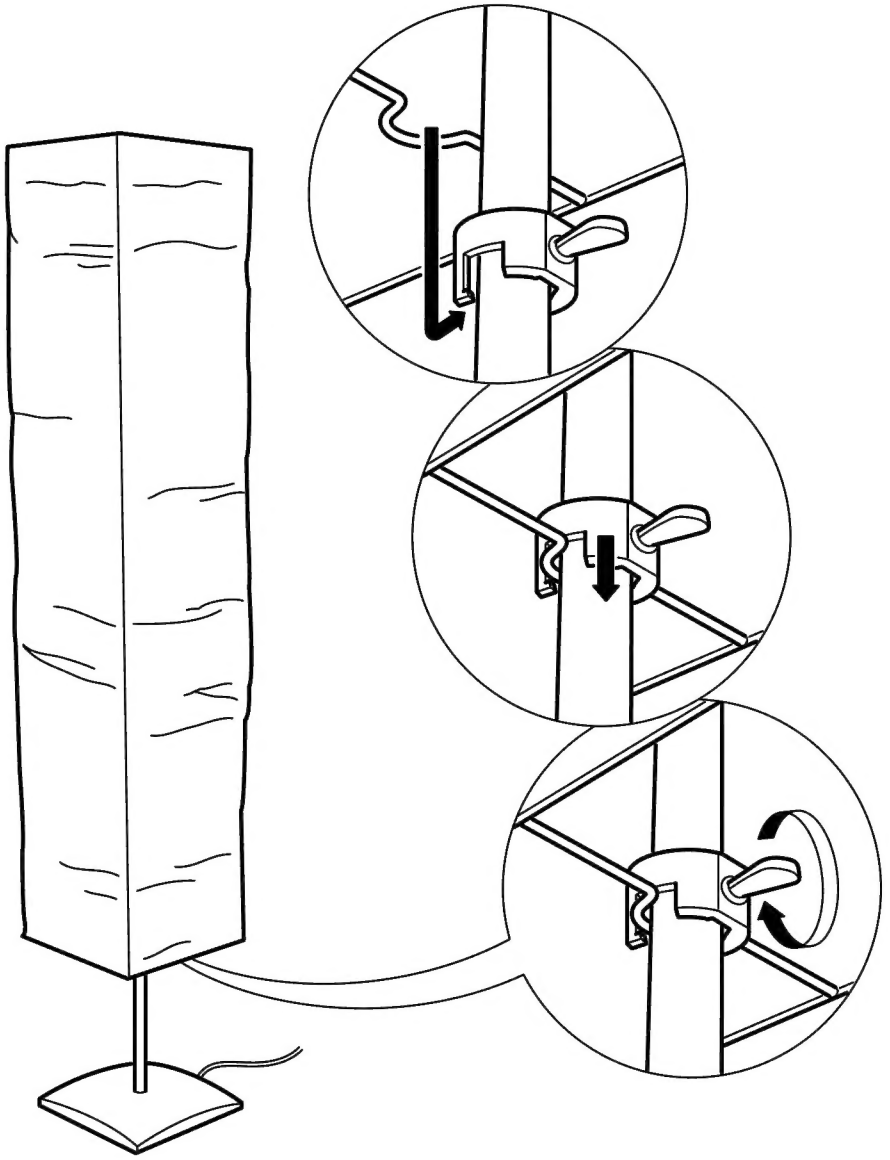

VRETEN

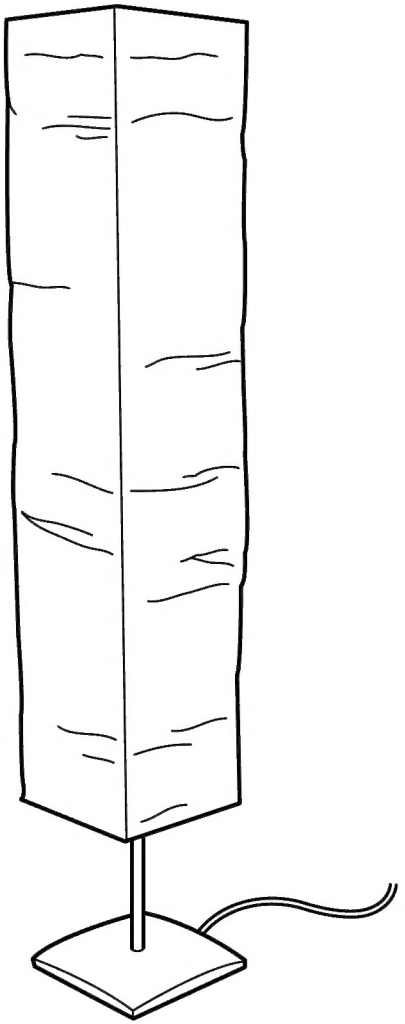

© Inter IKEA Systems B.V. 2001
AA-45680-3
IKEA®
Design and Quality
IKEA of Sweden

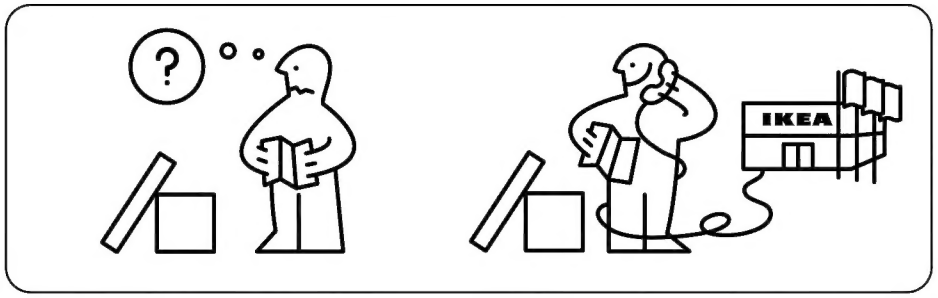

7

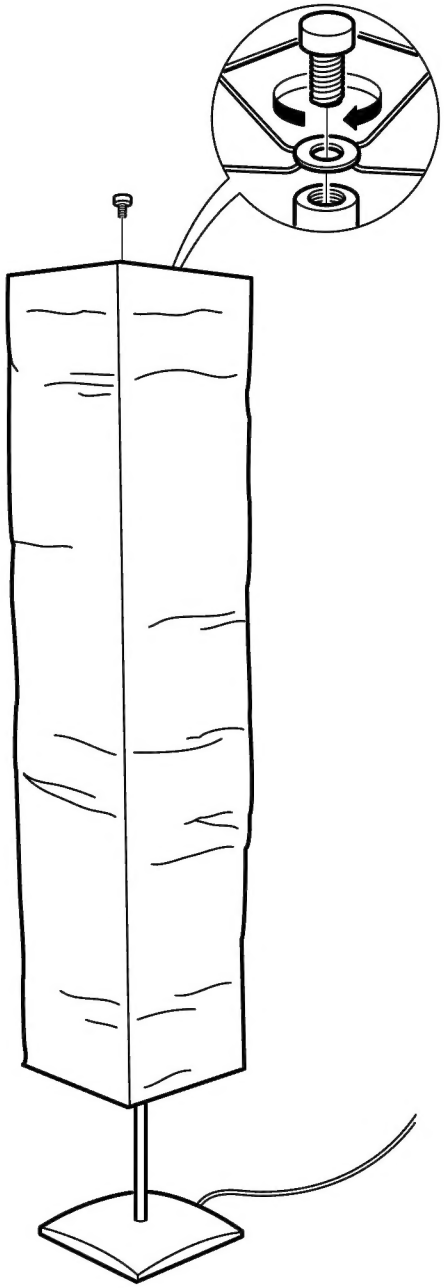

6

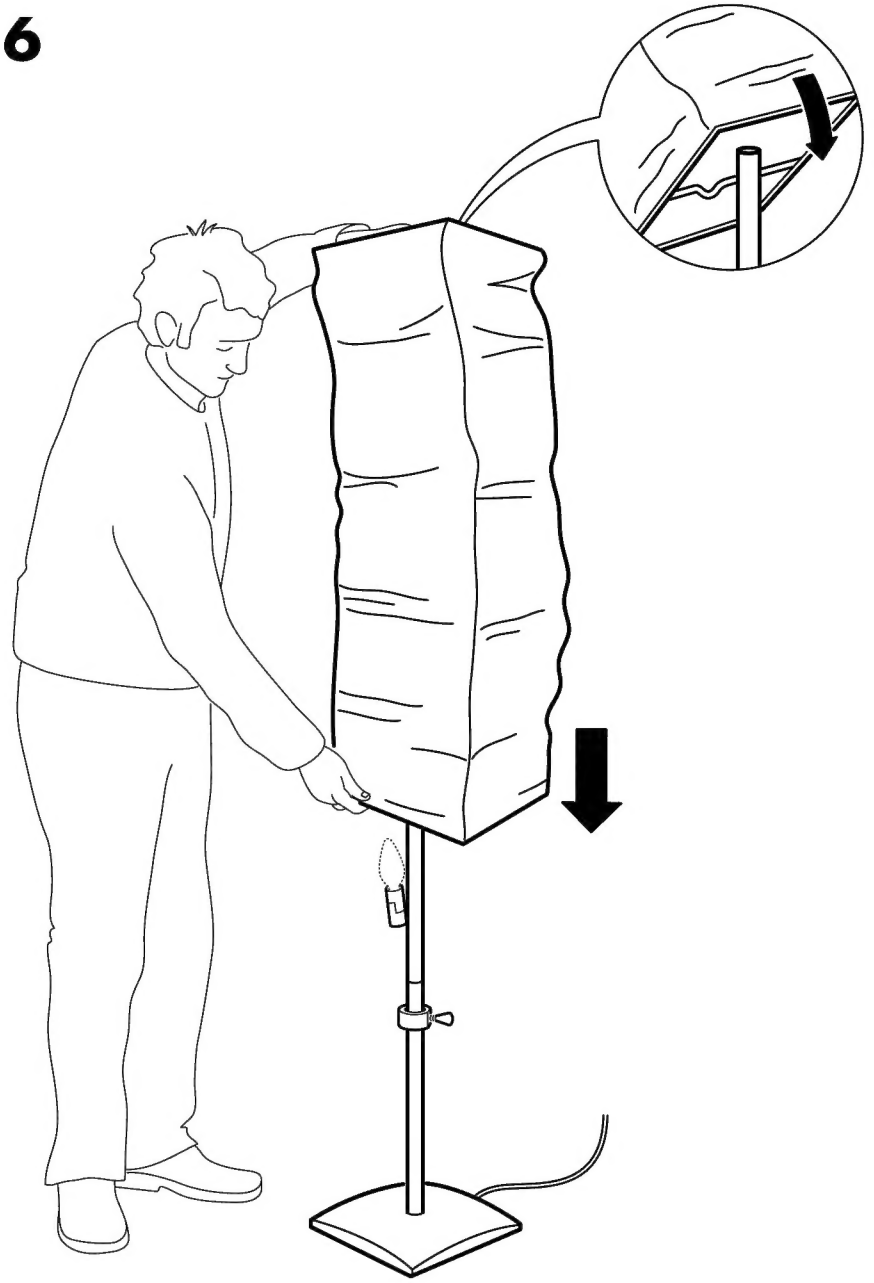

1

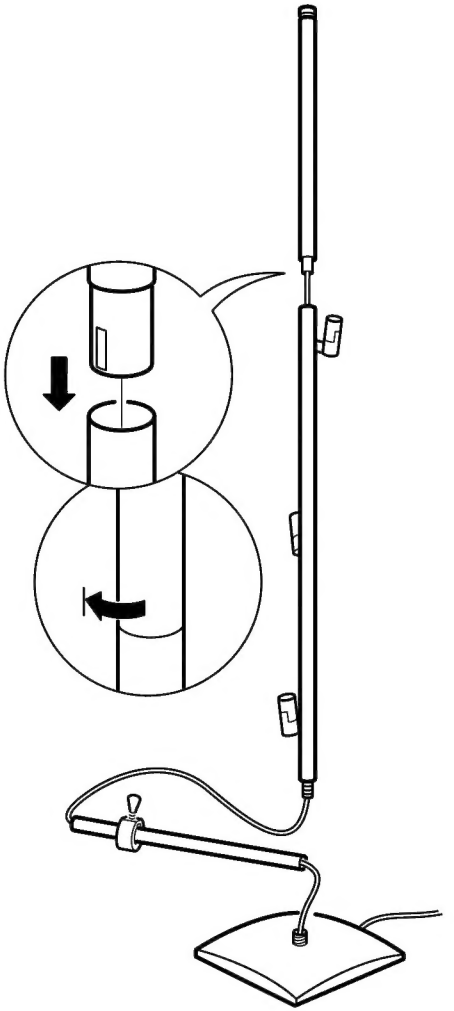

2

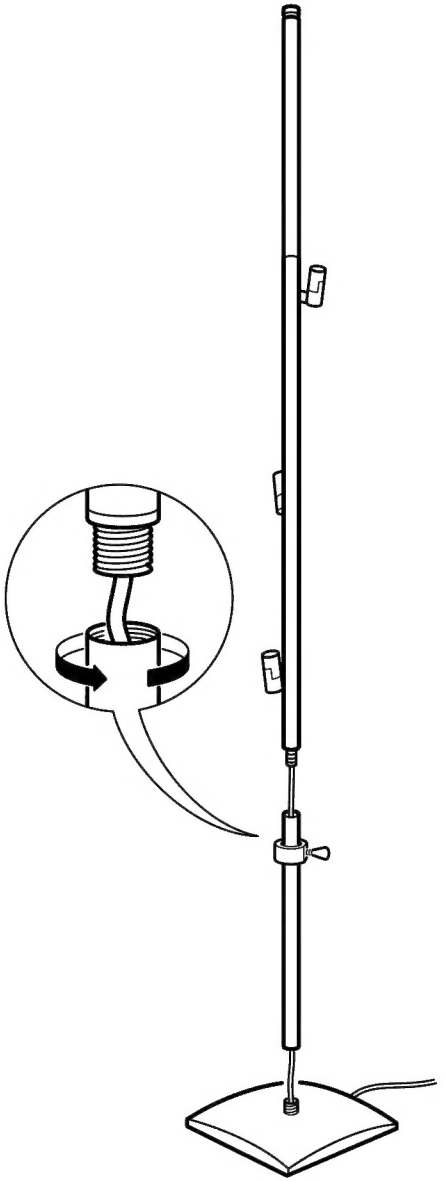

3

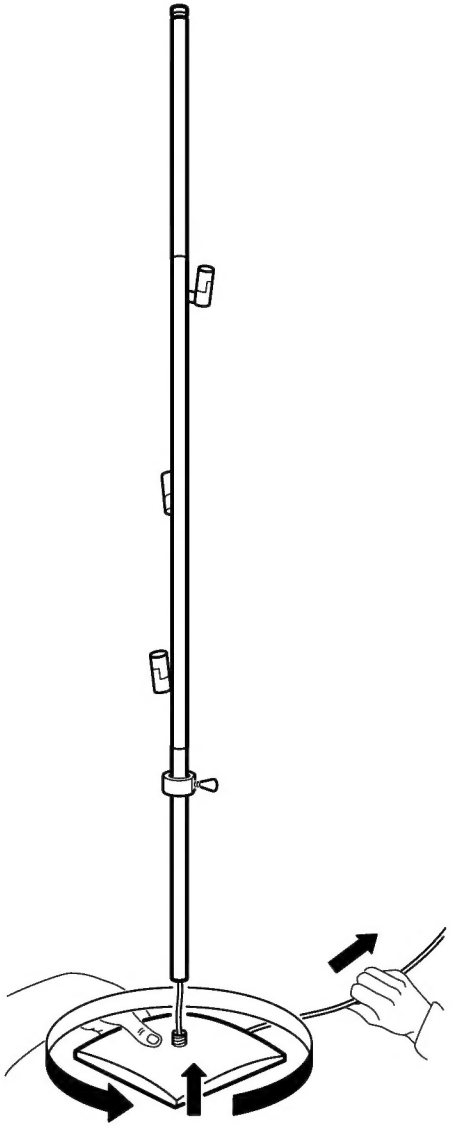

4

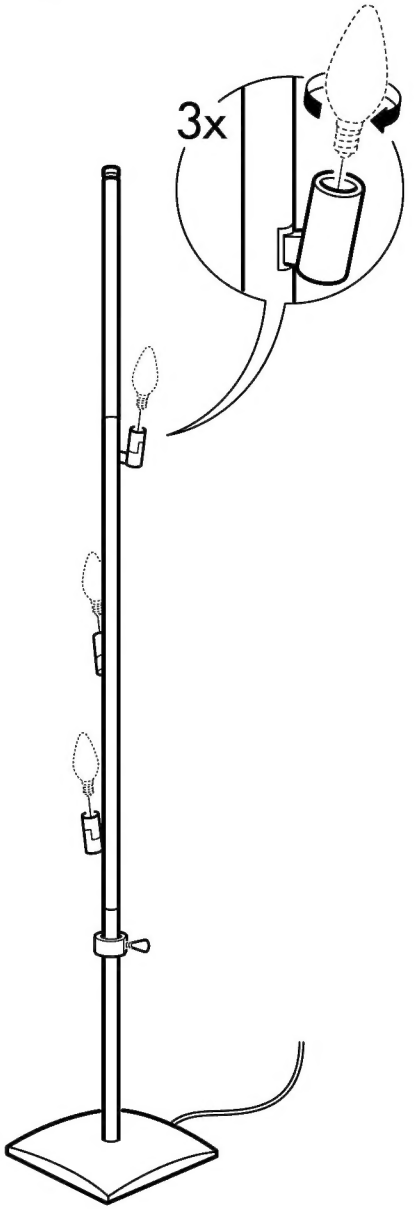
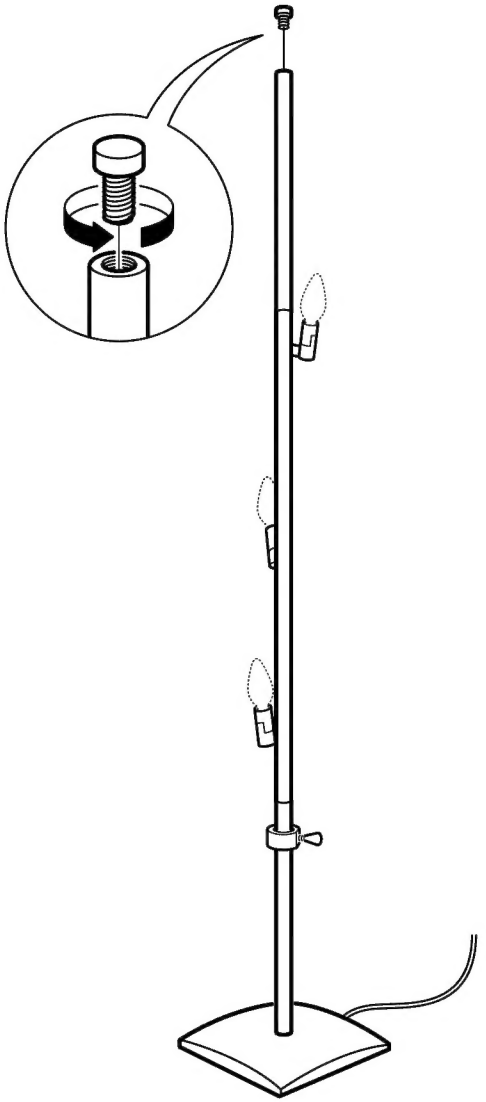
5